ARTE LAMP

ASSEMBLY INSTRUCTION
ИНСТРУКЦИЯ

A
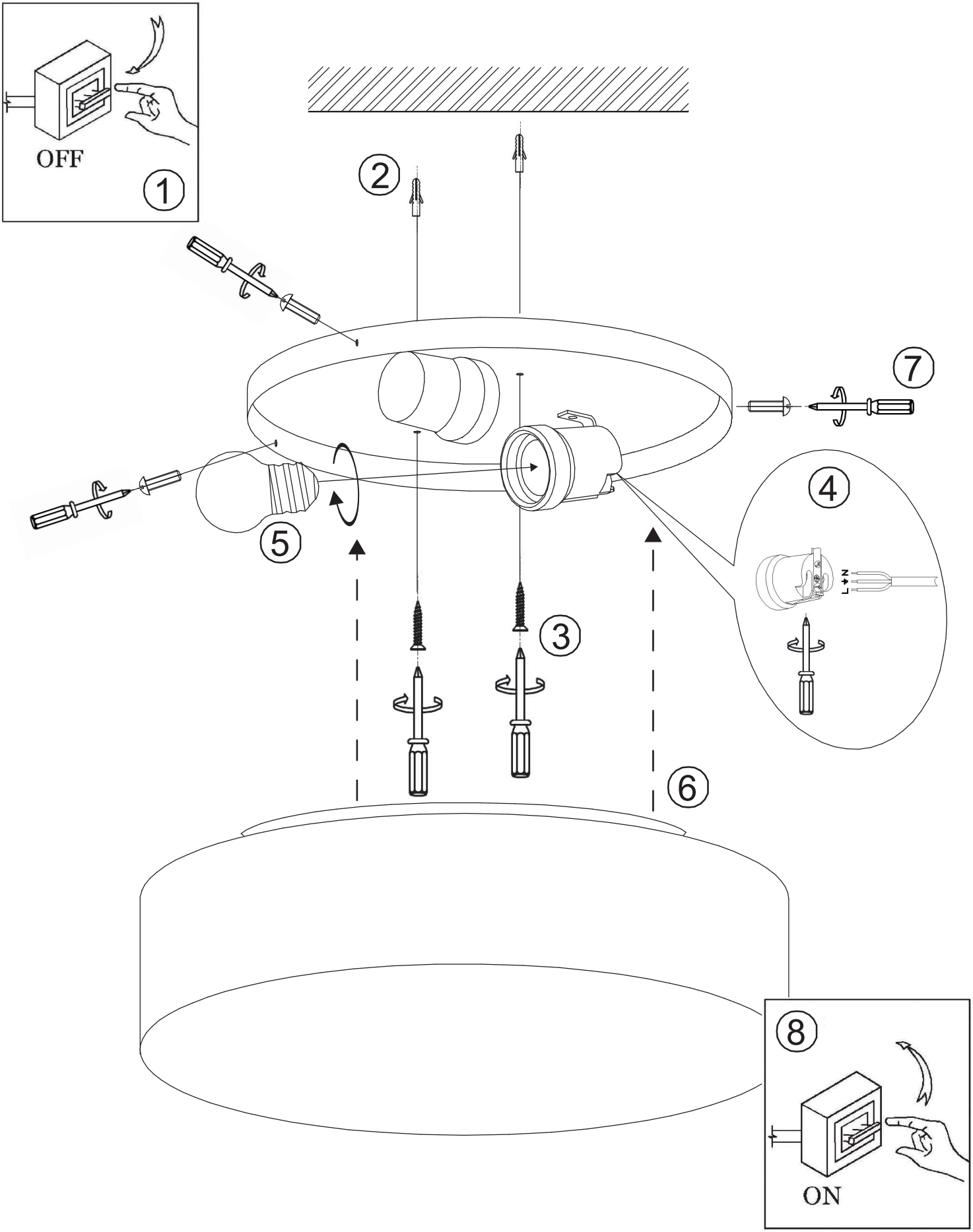
A7730PL-2WH